Preface

Thank you for using SINCR SV100 & SV500 Series solar pump inverter produced by Shenzhen SINCREA Electrical Technology Co., Ltd.

SV100 & SV500 is specially designed solar pump inverter. It transfer solar DC current to be AC to drive the water pump to work. With maximum power tracking (MPPT), light weak sleep, light intensity wake-up, protection for well lack of water,protection for tank full of water, underload protection, photovoltaic and grid automatic switching, unattended automatic operation and other control and protection functions. No need for batteries, storage water instead of battery, easy installation, low cost and low maintenance, economical and environmental protection, zero carbon emissions, widely used in solar agricultural irrigation, irrigation station renovation, domestic water supply, desert greening, etc.area.

In order to ensure the correct use of the inverters, to maximize the performance of the product and to ensure the safety of users and equipment, please read this manual carefully before using the inverters. Improper use may cause the inverter to operate abnormally, malfunction, or even equipment damage, personal injury and other accidents!

When the inverter is connected to the motor for the first time, please set the motor parameters according to the nameplate on motor: rated frequency, rated power, rated voltage, rated current, rated speed.

As we are committed to continuous improvement of our products and product information, the information provided by the company is subject to change without notice.

For the latest changes and more, please visit: www.sincrea.com

Contents

Chapter 1 Safety Precaution 3
1.1 Logo and definition of safety 3
1.2 Safety requirement 3
Chapter 2 Product Introduction 6
2.1 Inverter nameplate 6
2.2 Name rule 6
2.4 General technical specification 8
2.5 Product size 9
2.5.1 SV100 series dimension 9
2.5.2 SV500 series dimension 10
Chapter 3 Installation and Wiring 12
3.1 Standard wiring diagram 12
3.1.1 SV100 series wiring diagram 12
3.1.2 SV500 series wiring diagram 13
3.2 Terminal configuration 14
3.2.1 SV100 Series terminal 14
3.2.2 SV500 Series terminal 15
Chapter 4 Basic Operation and Run 18
4.1 Operation panel display 18
4.2 Keyboard operation method 18
4.2.1 Keys function description 18
4.2.2 LED Indicator light description 19
4.2.3 Status display switch method 19
4.2.4 Parameter setting method 20
4.3 Motor parameter self-adjustment 20
4.4 All kinds of status for inverter 21
4.4.1 Power-on initialization status 21
4.4.2 Motor self-adjustment status 21
4.4.3 Stop status 21
4.4.4 Running status 21
4.4.5 Malfunction status 21
Capter 5 Function Parameters Table 22
5.1 F00 Group: Basic function 22
5.2 F01 Group: Start and stop control 23
5.3 F02 Group: Motor parameters 23
5.4 F03 Group: Vector control 24
5.5 F04 Group: V/F control 25
5.6 F05 Group: Input terminals 25
5.7 F06 Group: Output terminals 27
5.8 F07 Group: Inverter interface 28
5.9 F08 Group: Enhanced functions 29
5.10 F0b Group: Protection 30
5.11 F0C Group: Communication parameters 32
5.12 F0d Group: Solar pump inverter function 33
5.13 F0U Group: Solar pump inverter state display 35
Chapter 6 Function Parameters for PV inverter 37
6.1 F0d Group: Special functions for PV inverters 37
Chapter 7 Fault checking and Solution 43
7.1 Fault alarm and countermeasures 43
Chapter 8 Peripheral Equipment 49
8.1 AC reactor 49
8.2 DC reactor 49
8.3 Remote operation keyboard 50
8.4 Braking unit and braking resistance 50

Chapter 1 Safety Precaution

Please read this operation manual carefully before installing, operating, maintaining and inspecting

1.1 Logo and definition of safety

In this manual, the safety precautions are sorted to “DANGER” ,“FORBID” and“CAUTION”.

DANGER Indicate if you do not use it properly, it may cause danger such as death or series injury

FORBID Indicate absolutely can not do.

CAUTION Indicate if you do not use it properly, it may cause danger such as slight injury or equipment broken

1.2 Safety requirement

DANGER

- This series of inverter is used to control the three-phase motor, cannot be used for single-phase motor or for other purposes, otherwise may cause the inverter failure or fire.
- This inverter cannot be simply applied to medical device or other devices which directly are related to the personal safety.
- This series of inverter is produced under strict quality control system, if the inverter fault may cause a big accident or loss, you will need to set up security measures such as bypass, just in case.

Install

CAUTION

- Mount the inverter on incombustible surface like metal, and keep away from flammable substances and heat souces.
- Install environment No rain shower,water drop,steam,dust,Oily dirt;No corrosion, flammable gas, liquid;No metal particles or metal powder, etc.
- When installing, don't let the drilling debris drop into the inverter， Otherwise it may cause inverter fault.
- When the inverter installed in electric closet,Should ensure that ventilation fluency for

electric closet and the outside world.

- Control circuit wiring should be separated from the power circuit wiring,, in order to avoid interference.

Wiring

DANGER

- Operation shall be performed by the professional engineering technician. Otherwise there will be danger of electric shock.
- Make sure the power is disconnected before connecting.Otherwise there will be danger of electric shock.
- The earth terminal PE shall be earthed reliably. Otherwise there may be danger of electric shock.
- Do not touch the inverter terminals (including control terminal).Otherwise there will be danger of electric shock.
- The brake resistor should be connected to the terminals (+) and PB. Otherwise it may cause fire.
- The primary loop connection cable to the exposed part of the interface, Should bind up with insulation tape, otherwise there is a risk of damage to property.

Wiring

CAUTION

- Never connect AC power to output UVW terminals,otherwise may cause inverter fault.
- It is forbidden to connect capacitor or phase advance LC/RC noise filter to output side of inverter,Otherwise may cause inverter fault.
- Confirm the power phase number, rated voltage is consistent with the product nameplate, otherwise it may cause inverter fault.
- Inverter main circuit wiring and control circuit wiring should be separate wiring or vertical cross, otherwise it will cause control signal interference.
- When the cable length between the inverter and motor exceeds 100 meters, it is recommended to use output reactor, in order to avoid too much of the distributed capacitance current resulting in failure of the inverter.

Running

DANGER

- Do not touch the inverter and its surrounding circuit with wet hand, otherwise there is risk of electric shock.
- Inverter wiring is complete and mount plate before electricity, charged conditions are strictly forbidden to remove the cover plate, otherwise there is risk of electric shock.
- When setting the function of fault automatic reset or power failure after restarting, dealing with machinery and equipment security isolation measures, otherwise it may cause injuries.
- After confirming the run command is cut off, you chould reset the fault and alarm signals, otherwise it may cause injuries.

CAUTION

- Do not control the inverter through turning on or turning off the power supply, otherwise it may cause damage of the inverter.
- Before operation, please confirm whether the motor and mechanical are within the using permissible range, otherwise it may damage the equipment.
- The radiator and brake resistance temperature is very high, do not touch, otherwise there is a risk of empyrosis.
- When it is used on lifting equipment, please install mechanical braking device at the same time.
- Please do not arbitrarily change the inverter parameter, the factory parameter setting can meet the most operation requirements, customers just need to set some necessary p arameters, modify parameters may cause the damage of the mechanical equipment.
- In occations of switching between power frequency to frequency conversion, the two contactors for controlling the power frequency and frequency conversion should interlock.

Chapter 2 Product Introduction

2.1 Inverter nameplate

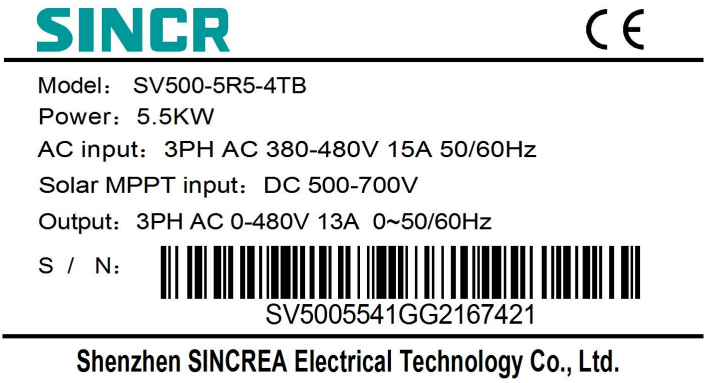

Fig.2-1:Product nameplate

2.2 Name rule

SV 500 - 7R5 - 4 T B

	Series
SV	Solar Pump inverter

	Type
100	Mini economic
500	High performance

	Power
0R7	0.75KW
004	4KW
7R5	7.5KW

	Brake unit
B	Built-in
Null	No built-in

	Voltage phase
S	1 Phase
T	3 Phase

	Input voltage
1	110V
2	220V
4	380V

Fig.2-2:Name rule

2.3 Selection Guide

Table 2-1 SV100 & SV500 series solar pump inverter models and Technical Data

Model No.	AC input voltage（V）	Solar MPPT voltage (Vmp)	Output power (KW)	Input current (A)	Output current (A)
SV100-0R7-2SB	Single phase 220~240V AC	250~350V DC	0.75	8.2	4.5
SV100-1R5-2SB			1.5	14.2	7
SV100-2R2-2SB			2.2	23	10
SV100-0R7-2TB	3 phase 220~240V AC	250~350V DC	0.75	5	4.5
SV100-1R5-2TB			1.5	7.7	7
SV100-2R2-2TB			2.2	11	10
SV100-0R7-4TB	3 phase 380~480V AC	500~700V DC	0.75	3.4	2.5
SV100-1R5-4TB			1.5	5	3.7
SV100-2R2-4TB			2.2	5.8	5
SV100-004-4TB			4	10	9
SV500-0R7-4TB	3 Phase 380~480V AC	500~700V DC	0.75	3.4	2.5
SV500-1R5-4TB			1.5	5	3.7
SV500-2R2-4TB			2.2	5.8	5
SV500-004-4TB			4.0	10	9
SV500-5R5-4TB			5.5	15	13
SV500-7R5-4TB			7.5	20	17
SV500-011-4TB			11	26	25
SV500-015-4TB			15	35	32
SV500-018-4TB			18.5	38	37
SV500-022-4T			22	46	45
SV500-030-4T			30	62	60
SV500-037-4T			37	76	75
SV500-045-4T			45	90	90
SV500-055-4T			55	105	110
SV500-075-4T			75	140	150
SV500-090-4T			90	160	176
SV500-110-4T			110	210	210
SV500-132-4T			132	240	250
SV500-160-4T			160	290	300
SV500-185-4T			185	330	340
SV500-200-4T			200	370	380
SV500-220-4T			220	410	415

2.4 General technical specification

Table 2-2 SV100 & SV500 Solar Pump Inverter Technical Specification

Item		Specification		
		2S	2T	4T
Solar Input	Input DC voltage range(Voc)	70~450V DC	70~450V DC	250~800V DC
	MPPT voltage range (Vmp)	250~350V DC	250~350V DC	500~700V DC
	Recommended MPPT voltage(Vmp)	310V DC	310V DC	540V DC
	Recoomend solar panel power(KW)	1.2~1.8 times of water pump power		
Grid Input	Back-up on grid/Generator input	Yes		
	Input voltage	1 PH 220~240V AC	3 PH 220~240V AC	3 PH 380~480V AC
Output	Voltage	1PH/ or 3PH 220~240V AC	3 PH 220~240V AC	3 PH 380~480V AC
	Frequency	0~600Hz(Default:50/60Hz)		
Standard	Display	LED keypad		
	MPPT efficiency	Up to 99%		
	Over load capacity	150%:60S; 180%:10S; 200%:1S		
	Ambient temperature range	-20℃~60℃; When >45℃ or altitude above 1000m, derating as required		
	Cooling Method	Fan Cooling		
	Communication port	Standard isolater RS-485, Modbus protocol		
	Remote control	RS485 real-time remote monitoring system, remote control and monitoring system status.		
	IP grade	Standard：IP20（can customized IP54 or IP65)		
	Built-in protection	shortage of water protection for deep well, full of water protection for tank, light weak sleep, light intensity wake-up, lightning protection, overvoltage protection, undervoltage protection, overcurrent protection, dry pumping protection, overload protection, phase loss protection, short circuit protection, overheat protection		

2.5 Product size

2.5.1 SV100 series dimension

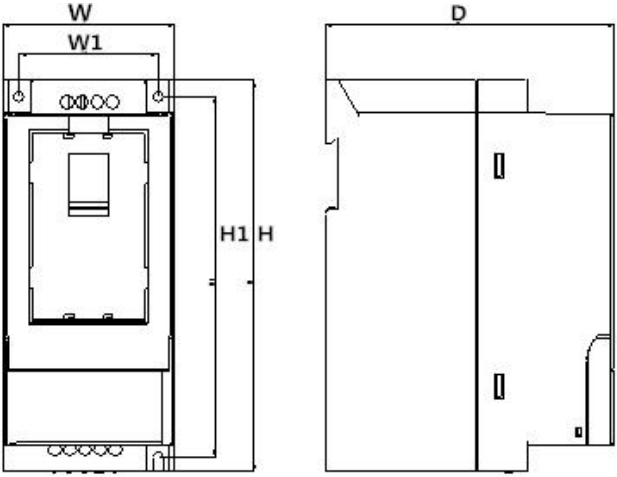

Model	W (mm)	H (mm)	D (mm)	W1 (mm)	H1 (mm)	Installation Hole F(mm)
SV100-0R7-2SB	85	190	149	69	175	Φ5
SV100-1R5-2SB						
SV100-2R2-2SB						
SV100-0R7-2TB						
SV100-1R5-2TB						
SV100-2R2-2TB						
SV100-0R7-4TB						
SV100-1R5-4TB						
SV100-2R2-4TB						
SV100-004-4TB						

2.5.2 SV500 series dimension

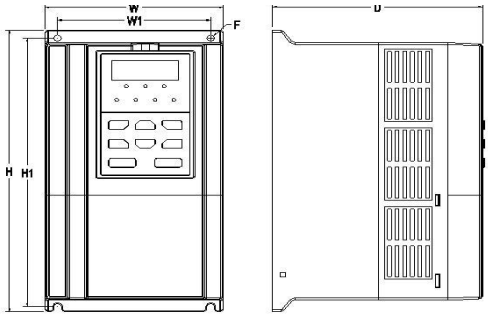

Fig.2-2 Standard dimension for SV500 series inverter(0.75KW~110KW)

Table 2-3 Mounting Hole Dimensions of SV500 Series Inverter（0.75~110KW ）

0.75~110KW						
Model	W (mm)	H (mm)	D (mm)	W1 (mm)	H1 (mm)	Installation hole F(mm)
SV500-0R7G-4TB	120	200	163	96	191	Φ5
SV500-1R5G-4TB						
SV500-2R2G-4TB						
SV500-004-4TB	140	268	173	120	256	Φ6
SV500-5R5-4TB						
SV500-7R5-4TB						
SV500-011-4TB	180	340	185	120	331	Φ6
SV500-015-4TB						
SV500-018-4TB	225	365	219	147	350	Φ7
SV500-022-4T						
SV500-030-4T	253	425	213	150	408	Φ7
SV500-037-4T						
SV500-045-4T	270	555	279	170	537	Φ7
SV500-055-4T						
SV500-075-4T	325	680	373	200	661	Φ10
SV500-090-4T						
SV500-110-4T						

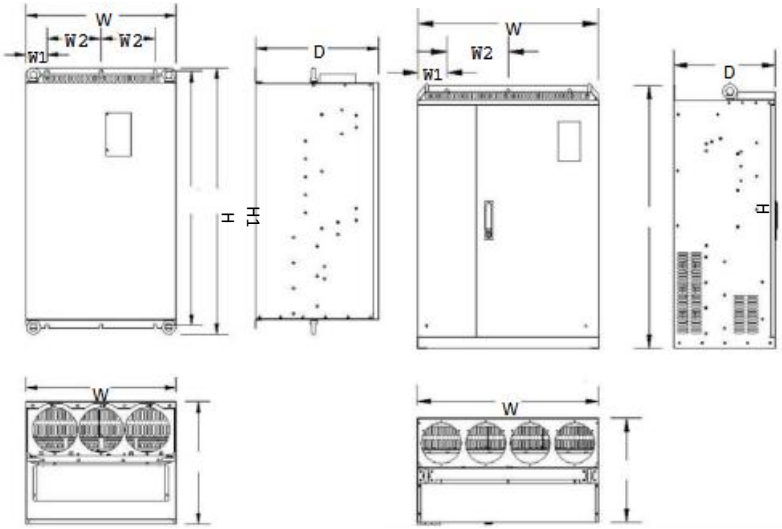

Fig.2-3 Standard dimension for SV500 series inverter(132~220KW)

Table 2-4 Mounting Hole Dimensions of SV500 Series Inverter（132~220KW）

Model	W（mm）	H（mm）	D（mm）	W1（mm）	H1（mm）	Installation hole F(mm)
SV500-132-4T	500	870	418	180	850	Φ11
SV500-160-4T						
SV500-185-4T						
SV500-200-4T						
SV500-220-4T	680	1000	390	230	965	Φ12

Chapter 3 Installation and Wiring

3.1 Standard wiring diagram

3.1.1 SV100 series wiring diagram

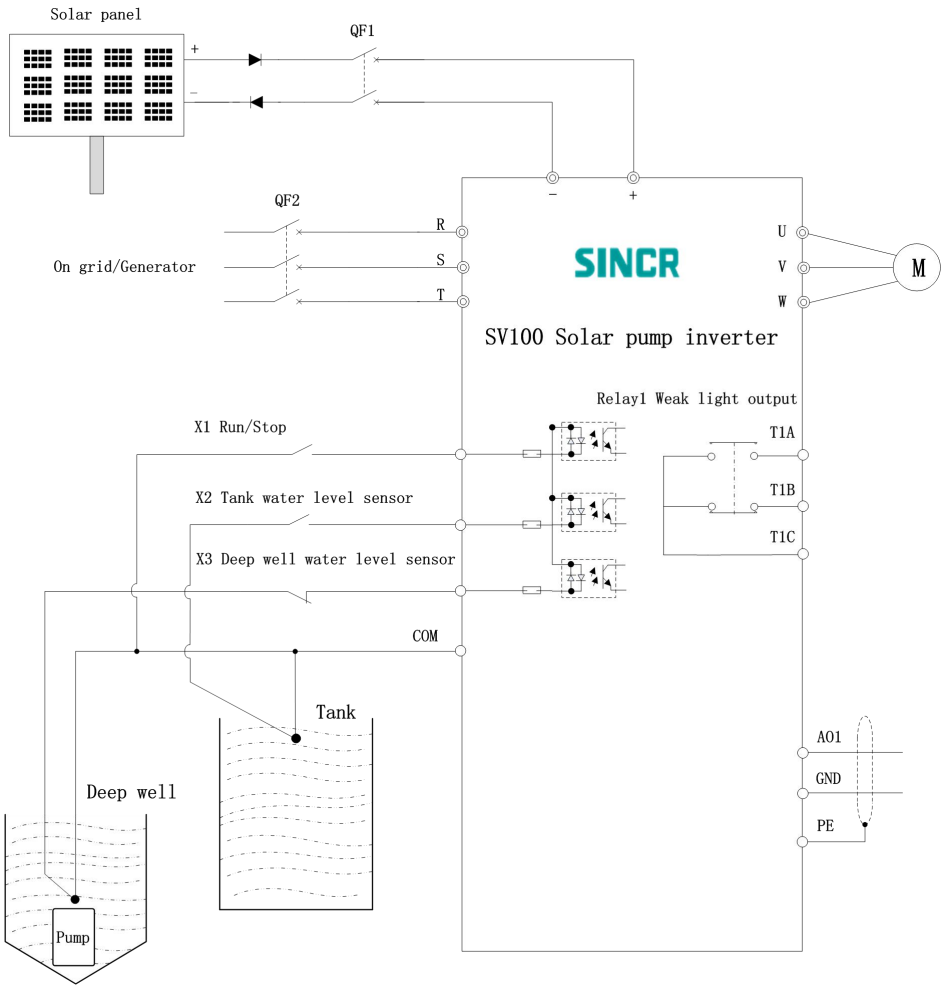

Fig.3-1 SV100 wiring diagram

3.1.2 SV500 series wiring diagram

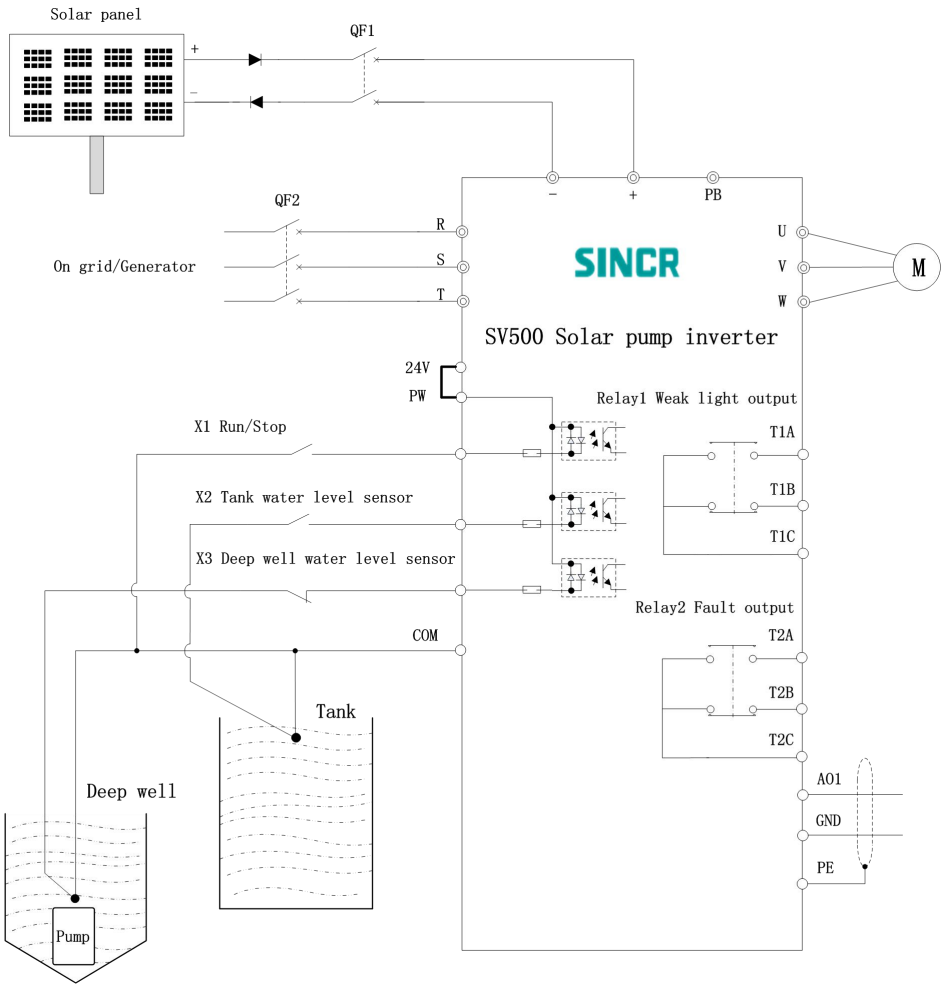

Fig.3-2 SV500 wiring diagram

Note:

If there is no relay 1, never close QF1 and QF2 at the same time,otherwise it will damage the inverter and solar panel.

3.2 Terminal configuration

Before wiring terminals,users should remove cover plate of inverter, find the main circuit terminals and control terminals on the inverter.

3.2.1 SV100 Series terminal

SV100 Main circuit function description:

Terminal	Name	Function description
R、S、T	On grid input terminal	Connect to 3-phase AC power
＋	Solar power input	(+) connected to solar panel +
－		(-) connected to solar panel -
U、V、W	Inverter output terminal	Connect to the motor
⏚	Earth	Earth terminal, earth resistance<10 OHM

Control circuit terminals

1.Control circuit terminal diagram:

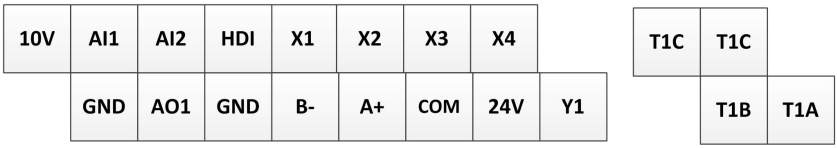

2.Control circuit terminals Function description:

Type	Terminal	Name	Function description
Analog input	+10V	+10V power supply	Provide +10V power supply for external units, with maximum output current of 10mA. It is generally used as the operating power supply for the external potentiometer.
	AI1	Analog input 1 (reference ground:GND)	Analog input, 0~10V/ 0~20mA, switched by J4(AI1) .
	GND	Common terminal of analog signal	Common terminal of analog input and output signal
Analog output	AO1	Analog output 1	Provide voltage or current output which can be switched by J1(AO1). Output range: 0~10V/ 0~20mA
	GND	Common terminal of analog signal	Common terminal of analog input and output signal
Digital input	X1	Multifunction input terminal	Digital signal input, The common terminal is COM. Customers could use parameter F05.01~F05.04 to set the function. While using
	X2		
	X3		
	X4		

Type	Terminal	Name	Function description
	COM	Common ground terminal for digital signal	these terminals, pls short ＋24V and PW. Terminal valid state Xn and COM are interlinked, Xn low level effectively. Input voltage range: 9~30V Input impedance: 3.3kΩ
Digital output	Y1	Open collector output port	Open collector output terminal, common terminal for COM..
	COM	Common ground terminal for digital signal	
Relay output	R1A	Relay	Get by the Code F06.03 and F06.04 ,defined as a variety of functions for Relay TxA－TxC:Normally-open contact; TxB－TxC:Normally-closed contact; Max contact capacity:AC250V/2A , DC30V/1A
	R1B		
	R1C		
Communication	A+	RS485 anode	Standard 485 interface
	B-	RS485 cathode	

3.2.2 SV500 Series terminal

SV500 Main circuit function description:

Terminal	Name	Function description
R、S、T	On grid input terminal	Connect to 3-phase AC power
＋	Solar power input	(+) connected to solar panel + (-) connected to solar panel -
－		
＋、PB	Braking resistance terminal	external braking resistance to quick stop
U、V、W	Inverter output terminal	Connect to the motor
⏚	Earth	Earth terminal, earth resistance<10 OHM

Control circuit terminals

1.Control circuit terminal diagram:

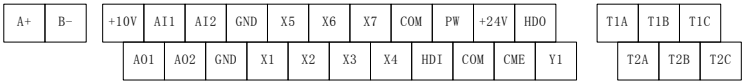

2.Control circuit terminals Function description:

Type	Terminal	Name	Function description
Analog input	+10V	+10V power supply	10V power supply provided inside the inverter
	AI1	Analog input 1 (reference ground:GND)	Analog voltage/current input terminal (reference ground: GND), Input range: 0~10V/0~20 mA The user can select the analog voltage or current signal input via the AI1 jumper on the control board as needed. Factory default selection of analog voltage input
	AI2	Analog input 2 (reference ground:GND)	Analog voltage/current input terminal (reference ground: GND), Input range: 0~10V/0~20 mA The user can select the analog voltage or current signal input via the AI2 jumper on the control board as needed. Factory default selection of analog current input
	GND	Common terminal of analog signal	Common ground of analog input and analog output
Analog output	AO1	Analog output 1	Analog voltage and current output, can represent 11 kinds of quantities, can be set by function code F6.07 Output range: 0~10V/0~20mA The voltage/current output can be switched by jumper AO1
	AO2	Analog output 2	The analog voltage and current output can represent 11 kinds of quantities, Output range: 0~10V/0~20mA The voltage/current output can be switched by jumper AO2
	GND	Common terminal of analog signal	Common ground for analog input and analog output
Digital input	X1	Multifunction input terminal	Program-defined multi-function digital input terminal, common terminal For COM, the function can be set by function code F05.01~F05.07. When using the multi-function input terminal, use the internal power supply to short the +24V and PW terminals, the terminal active state Xn is connected to COM, and Xn is active low. Input impedance: 3.3k Input voltage range: 9~30V
	X2		
	X3		
	X4		
	X5		
	X6		
	X7		
	COM	Common ground terminal for digital signal	
Pulse input	HDI	High speed pulse input	When using a high speed pulse input port，High-speed pulse input is optocoupler isolated input Input impedance: 1k Maximum input frequency: 50kHZ Input voltage range: 9V~30V
	COM	Common ground terminal for HDI	

Type	Terminal	Name	Function description
Pulse output	HDO	High speed pulse output	When using the internal +24V power supply, you need to short the CME and COM terminals. Output high frequency pulse, can represent 11 kinds of quantity, frequency output range: 0~50kHz
	CME	Common terminal of open collector output	
	COM	Common ground terminal for HDO	
Relay output	TxA	Relay1 and Relay2	It can be programmed as a relay output terminal with multiple functions by function codes F06.03 and F06.04. TxA-TxC: normally open contact; TxB-TxC: normally closed contact AC250V/2A DC30V/1A
	TxB		
	TxC		
Commu nication	A+	RS485 anode	RS-485 serial communication for connection to other monitoring devices
	B-	RS485 cathode	

Chapter 4 Basic Operation and Run

4.1 Operation panel display

Operational control, parameters setting and display can be performed through the operation panel.Also the keyboard with potentiometer is optional,as show in Fig.4-1.

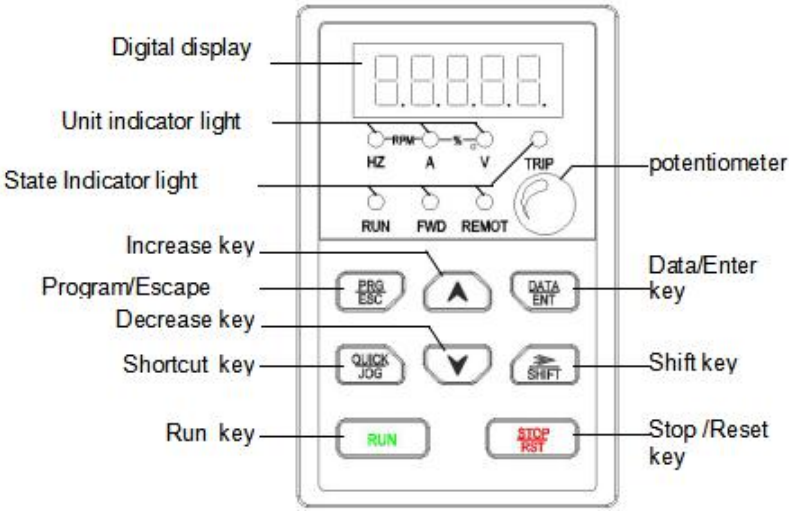

Fig.4-1 keyboard schematic diagram

4.2 Keyboard operation method

4.2.1 Keys function description

The keyboard has eight keys,Its function description as shown in table 4-1.

Table 4-1 Functions of keys

Keys	Name	Description	
PRG/ESC	Programming Key	Entry or escape of first-level menu.	
DATA/ENT	Enter Key	Progressively enter menu and confirm parameters.	
∧	Increase key	Progressively increase data or function codes.	
∨	Decrease key	Progressively decrease data or function codes.	
SHIFT	Shift Key	While modifying parameters, it is used to select the data bits. In stop and operate mode, it is used to cyclically display parameters	
RUN	Run Key	Start to run the inverter in keypad control mode.	Pressing the RUN and

Keys	Name	Description	
STOP RST	STOP / RESET Key	In running status,it can be used to stop the inverter. When fault alarm, it can be used to reset the inverter. This button is restricted by F07.04.	STOP/REST at the same time can achieve inverter free stop.
QUICK JOG	Shortcut Key	Determined by Function Code F07.03: 0: Jog operation 1: Switch between forward and reverse 2: Clear the UP/DOWN settings.	

4.2.2 LED Indicator light description

Have 5 digit LED ,3 units indicator lights, and 4 status indicator lights ,which can display all kinds of monitoring data and alarm codes such as reference frequency, output frequency and so on,as show in Fig.4-1.The 3 units indicator lights combination can display 5 unit instructions,function and unit indicator light description as show in Table 4-2.

Table 4-1 indicator light description

Indicate		Indicator light	Description
Function indicator	RUN	Running indicator	Light on: running status Extinguished: stop status
	FWD	Forward/reverse indicator	Light on: reverse running Extinguished: forward running
	REMOT	Terminal control indicator	Light on:terminal control Extinguished: keypad control Flickering:communication control
	TRIP	Fault indicator	Light on:Inverter fault
Unit indicator	Hz	Frequency unit indicator	Light on:running frequency value Flickering:setting frequency value
	A	Current unit indicator	Current unit indicator light
	V	Voltage unit indicator	Voltage unit indicator light
	RPM	Rotating speed unit indicator	Light on:running rotate speed Flickering:setting rotate speed
	%	Percentage indicator	Light on:running parameter value Flickering:setting parameter value

4.2.3 Status display switch method

SV series inverter at stop or running state,can be used SHIFT key to circularly select the display parameters. When modifying the parameters, it can be used to select the bits of parameter for modification. For example, single-phase inverter without a motor running condition, introduce the parameter switch display method:

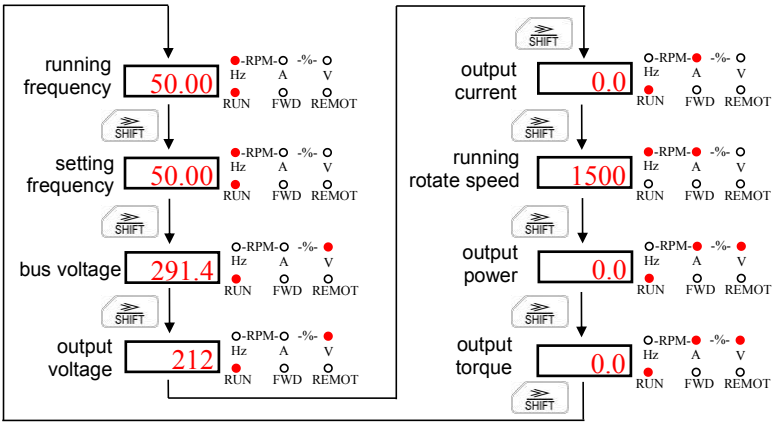

Fig.4-2 Under running condition, monitor parameters switching

4.2.4 Parameter setting method

Take changing the Relay 1, and set F06.04 = 6 as an example, describe how to modify SV series inverter parameters:

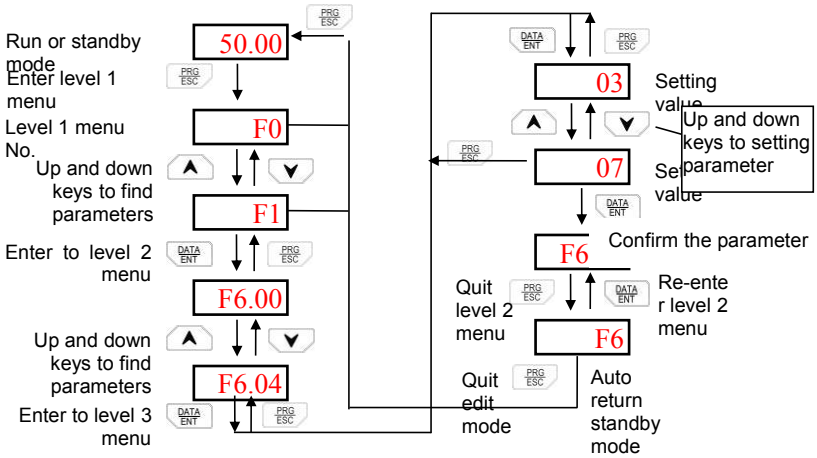

Fig.4-3 Function code parameter setting process

4.3 Motor parameter self-adjustment

If “Sensorless Vector Control”mode is chosen（F00.00=1）, motor nameplate parameters must be input correctly as the self-adjustment is based on it.The performance of vector control depends on the parameters of motor

strongly, so in order to achieve excellent performance, firstly customers must obtain the motor parameter exactly.The procedure of motor parameter self-adjustment is as follows:

1）Firstly, choose keypad command as the run command source (F00.01).

2）Then input following parameters according to the actual motor parameters:F02.01: motor rated power;F02.02: motor rated frequency;F02.03: motor rated speed;F02.04: motor rated voltage; F02.05: motor rated current.

3）Then setting F00.16＝1 or 2, make the inverter for dynamic or static self learning.

4）Press the RUN keys，motor will be self learning.

5）At last motor parameter self learning finish.

For detailed description, please refer to function code F00.16.

When the inverter is self learning,it will automatically calculate following parameter of the motor:

F02.06: motor stator resistance;F02.07: motor rotor resistance;F02.08: motor stator and rotor inductance;F02.09: motor stator and rotor mutual inductance;F02.10: motor current without load.

☞CAUTION:

The motor should be uncoupled with its load while self learning; otherwise, the motor parameters obtained by self learning may be incorrect.

4.4 All kinds of status for inverter

4.4.1 Power-on initialization status

Firstly the system initializes during the inverter power-on, and LED displays “00000”. After the initialization is completed, the inverter is on stand-by status.

4.4.2 Motor self-adjustment status

Please refer to the description of function code F00.16.

4.4.3 Stop status

In stop status,there are nine parameters which can be chosen to display or not.They are: setting frequency, DC bus voltage, input terminal status, PID setting value, PID feedback value, analog AI1, analog AI2, and current No. of multi-steps. Press SHIFT keys to switch display parameters.

4.4.4 Running status

In running status,there are fifteen parameters which can be chosen to display or not.They are:running frequency, setting frequency, DC bus voltage,output voltage,output current, rotate speed, output power, output torque,PID setting value, PID feedback value, HDI frequency,analog AI1, analog AI2, and current No. of multi-steps.Press SHIFT keys to switch display parameters.

4.4.5 Malfunction status

SV Series inverter offers a variety of fault information,for details, please refer to Chapter 7 Fault Diagnosis and Countermeasures.

Capter 5 Function Parameters Table

Symbol description:

"◇" indicates that this parameter can be modified all the time.

"◆" indicates that this parameter cannot be modified during the inverter is running.

"¤" indicates that this parameter is read only.

5.1 F00 Group: Basic function

Code	Name	Setting Range	Default	Modify
F00.00	Speed control mode	0: Sensorless vector control 1: Sensorless vector control 1 2: V/F control	2	◆
F00.01	Run command	0: Keypad (LED extinguished) 1: Terminal (LED lights on) 2: Communication(LED flickering)	0	◇
F00.03	Maximum frequency	10.00~400.00Hz	50.00Hz	◆
F00.04	Upper limit frequency	0.00Hz~F00.03	50.00Hz	◆
F00.05	Lower limit frequency	0.00Hz~F00.04	0.00Hz	◆
F00.11	Acceleration time 1	0.1～3600.0S	Depend on model	◇
F00.12	Deceleration time 1	0.1～3600.0S	Depend on model	◇
F00.13	Running direction	0: Forward 1: Reverse 2: Forbid reverse	0	◇
F00.14	Carrier frequency setting	1.0–15.0kHz	Depend on model	◇
F00.15	Motor parameter self-learning	0: No operation 1: Rotation self-learning 2: Static self-learning	0	◆
F00.17	Inverter G/P type	0: G type 1: P type	0	◆
F00.18	Parameter reset	0: No operation 1: Reset to be default parameters 2: Clear fault records	0	◆

5.2 F01 Group: Start and stop control

Code	Name	Setting Range	Default	Modify
F01.05	Acceleration/Deceleration mode	0: Linear type 1: S curve	0	◆
F01.08	Stop mode selection	0: Decelerate to stop 1: Free stop	0	◇
F01.18	Terminal function when power-on	0: Terminal running command is invalid when power on 1: Terminal running command is valid when power on	1	◇
F01.19	Operation when running frequency is lower than the lower frequency limit	0: Run at the lower limit frequency 1: Stop 2: Sleep standby	0	◆
F01.20	Delay time of wake-up from sleep standby	0.0–3600.0s	0.0s	◇
F01.21	Restart selection when power on again	0: Not allowed to restart 1: Allowed to restart	1	◇
F01.22	Restart waiting time when power on again	0.0~3600.00S	1.0s	◇

5.3 F02 Group: Motor parameters

Code	Name	Setting Range	Default	Modify
F02.00	Motor type	0: Asynchronous motor 1: Synchronous motor	0	◆
F02.01	Motor rated power	0.1～3000.0KW	Depend on model	◆
F02.02	Motor rated frequency	0.01Hz～Maximum frequency	50.00Hz	◆
F02.03	Motor rated speed	0～36000rpm	Depend on model	◆
F02.04	Motor rated voltage	0～1200V	Depend on model	◆
F02.05	Motor rated current	0.8～6000.0A	Depend on model	◆

Code	Name	Setting Range	Default	Modify
F02.06	Motor stator resistance	0.001~65.535Ω	Depend on model	◇
F02.07	Motor rotor resistance	0.001~65.535Ω	Depend on model	◇
F02.08	Motor leakage inductance	0.1~6553.5mH	Depend on model	◇
F02.09	Motor mutual inductance	0.1~6553.5mH	Depend on model	◇
F02.10	Motor no-load current	1~6553.5A	Depend on model	◇
F02.15	Synchronous motor rated power	0.1～3000.0KW	Depend on model	◆
F02.16	Synchronous motor rated frequency	0.01Hz～Maximum frequency	50.00Hz	◆
F02.17	Synchronous motor poles	1~50	2	◆
F02.18	Synchronous motor rated voltage	0～1200V	Depend on model	◆
F02.19	Synchronous motor rated current	0.8～6000.0A	Depend on model	◆
F02.26	Motor overload protection	0: No protection 1: Common motor 2: Variable frequency motor	2	◆
F02.27	Motor overload protection coefficient	20.0%–120.0%	100.00%	◇

5.4 F03 Group: Vector control

Code	Name	Setting Range	Default	Modify
F03.00	Speed loop proportional gain1	0–200.0	20.0	◇
F03.01	Speed loop integral time1	0.000–10.000s	0.200s	◇
F03.02	Low switching frequency	0.00Hz–F03.05	5.00Hz	◇
F03.03	Speed loop proportional gain 2	0–200.0	20.0	◇
F03.04	Speed loop integral time 2	0.000–10.000s	0.200s	◇
F03.05	High switching frequency	F03.02–F00.03	10.00Hz	◇
F03.06	Speed loop output filter	0-8	0	◇

5.5 F04 Group: V/F control

Code	Name	Setting Range	Default	Modify
F04.00	V/F curve selection	0：Linear V/F curve 1：Square V/F curve 2：1.3 torque V/F curve 3：1.7 torque V/F curve 4：2.0 torque V/F curve 5：User-defined V/F curve	4	◆
F04.01	Torque boost	0.0%：（Auto）0.1%~10.0%	0.00%	◇
F04.02	Torque boost cutoff	0.0%~50.0%	20.00%	◇
F04.26	Energy-saving running selection	0: No action 1: Automatic energy-saving running	0	◆

5.6 F05 Group: Input terminals

Code	Name	Setting Range	Default	Modify
F05.00	HDI input type	0: High-speed pulse input. 1: HDI switch input	1	◆
F05.01	X1 terminals function	0: No function 1: Forward running 2: Reverse running 3: 3-wire control 4: Forward jogging 5: Reverse jogging 6: Coast to stop 7: Fault reset 8: Operation pause 9: External fault input 10~35: Reserved 36: Shift the command to the keypad 37: Shift the command to terminals	1	◆
F05.02	X2 terminals function		43	◆
F05.03	X3 terminals function		44	◆
F05.04	X4 terminals function		0	◆

Code	Name	Setting Range	Default	Modify
F05.05	X5 terminals function	38: Shift the command to communication 39: Reserved 40: Clear the power consumption 41: Keep the power consumption 42: Forced switch to mains input 43: Full water signal 44: Empty-water signal 45: Two-phase control mode of the single-phase motor 46~63: Reserved	0	◆
F05.09	HDI terminals function selection		0	◆
F05.10	Polarity selection of the input terminals	0x000~0x10F	0x000	◆
F05.11	Digital input filter time	0.000–1.000s	0.010s	◇
F05.13	Running mode for terminal control	0: 2-wire control 1 1: 2-wire control 2 3: 3-wire control 2	0	◆
F05.14	X1 terminal switch-on delay time	0.000–50.000s	0.000s	◇
F05.15	X1 terminal switch-off delay time		0.000s	◇
F05.16	X2 terminal switch-on delay time		0.000s	◇
F05.17	X2 terminal switch-off delay time		0.000s	◇
F05.18	X3 terminal switch-on delay time		0.000s	◇
F05.19	X3 terminal switch-off delay time		0.000s	◇
F05.20	X4 terminal switch-on delay time		0.000s	◇
F05.21	X4 terminal switch-off delay time		0.000s	◇
F05.30	HDI terminal switch-on delay time		0.000s	◇
F05.31	HDI terminal switch-off delay time		0.000s	◇

5.7 F06 Group: Output terminals

Code	Name	Setting Range	Default	Modify
F06.03	Relay R1 output	0: Invalid 1: In operation 2: Forward running 3: Reverse running 4: Jogging running 5: Inverter fault 6~7:Reserved 8: Frequency arrival 9: Zero speed running 10: Upper limit frequency arrival 11: Lower limit frequency arrival 12: Ready for operation 13: Reserved 14: Overload alarm 15: Underload alarm 16~19: Reserved 20: External fault valid 21: Reserved 22: Running time arrival 23: MODBUS communication virtual terminals output 24~26: Reserved 27: Weak light 28~29: Reserved 30: Shift to PV mode (If the system works in PV mode, relay output is high.)	30	◇
F06.04	Relay R2 output		5	◇
F06.05	Polarity of output terminals	0~F	0	◇
F06.10	Delay time for relay R1 switch-on	0.000~50.000s	10.000s	◇
F06.11	Delay time for relay R1 switch-off	0.000~50.000s	10.000s	◇
F06.12	Delay time for relay R2 switch-on	0.000~50.000s	0.000s	◇
F06.13	Delay time for relay R2 switch-off	0.000~50.000s	0.000s	◇

5.8 F07 Group: Inverter interface

Code	Name	Setting Range	Default	Modify
F07.00	Setting password	0~65535	0	◇
F07.02	QUICK/JOG function select	0: No function 1: Jogging running. Press QUICK/JOG to begin the jogging running. 2: Shift the display state by the shifting key.Press QUICK/JOG to shift the displayed function code from right to left. 3: Shift between forward rotations and reverse rotations. Press QUICK/JOG to shift the direction of the frequency commands. This function is only valid in the keypad commands channels. 4: Clear UP/DOWN settings. Press QUICK/JOG to clear the set value of UP/DOWN. 5: Coast to stop. Press QUICK/JOG to coast to stop. 6: Shift the running commands source.Press QUICK/JOG to shift the running commands source. 7: Quick commissioning mode (based on non-factory parameters)	6	◆
F07.03	QUICK/JOG run command channel switching select	0: Keypad control→terminal control→communication control 1: Keypad control←→terminals control 2: Keypad control←→communication control 3: Terminals control←→communication control	1	◇
F07.04	STOP/RST function	0: Only valid for the keypad control 1: Both valid for keypad and terminals control 2: Both valid for keypad and communication control 3: Valid for all control modes	1	◇
F07.12	Inverter module temperature	-20.0~120.0°	/	¤
F07.13	Software version	1.00–655.35	/	¤
F07.14	Inverter total running time	0–65535h	/	¤

Code	Name	Setting Range	Default	Modify
F07.15	Power consumption at high	0~65535(*1000),Unit:kwh	/	¤
F07.16	Power consumption at low	0.0~999.9,Unit:kwh	/	¤
F07.17	Inverter G/P type	0: G type 1: P type	/	¤
F07.18	Rated power of the inverter	0.4~3000.0kW	/	¤
F07.19	Rated voltage of the inverter	50~1200V	/	¤
F07.20	Rated current of the inverter	0.1~6000.0A	/	¤

5.9 F08 Group: Enhanced functions

Code	Name	Setting Range	Default	Modify
F08.00	Accelerate time 2	0.0–3600.0s	Depend on model	◇
F08.01	Decelerate time 2	0.0–3600.0s	Depend on model	◇
F08.02	Accelerate time 3	0.0–3600.0s	Depend on model	◇
F08.03	Decelerate time 3	0.0–3600.0s	Depend on model	◇
F08.04	Accelerate time 4	0.0–3600.0s	Depend on model	◇
F08.05	Decelerate time 4	0.0–3600.0s	Depend on model	◇
F08.28	Automatic reset times after fault	0~10	5	◇
F08.29	Automatic reset waiting time after fault	0.1~3600.0s	10.0s	◇
F08.39	Fan running mode	0: Normal mode. 1: The fan keeps on running after power on 2: The fan will start when the running frequency of the inverter is more than 0Hz; if the running frequency is 0Hz or changes from running state to stop state, the fan will stop after 1 min.	0	◇
F08.48	High bit of initial power consumption	0–59999	0	◇
F08.49	Low bit of initial power consumption	0.0–999.9	0	◇

5.10 F0b Group: Protection

Code	Name	Setting Range	Default	Modify
F0b.00	Phase loss protection	000~111 0:Disable 1:Enable	Depend on model	◇
F0b.01	Frequency decrease at sudden power loss	0：Disable 1：Enable	0	◇
F0b.02	Frequency decrease ratio at sudden power loss	0.00Hz~F0.03/s	2.00Hz/s	◇
F0b.03	Overvoltage stall protection	0: Disable 1: Enable	1	◇
F0b.04	Protection voltage at overvoltage stall	120–150%(standard bus voltage) (380V) 120–150%(standard bus voltage) (220V)	136% 120%	◇
F0b.17	Current fault code	0:No fault 1~3:Reserved 4:OC1 5:OC2 6:OC3 7:OV1	/	¤
F0b.18	Previous fault code	8:OV2 9:OV3 10:UV 11:Motor overload(OL1) 12:The inverter overload(OL2) 13:Input side phase loss(SPI)	/	¤
F0b.19	Previous 2 fault code	14:Output side phase loss(SPO) 15: Overheat of the boost module (OH1) 16: Overheat fault of the inverter module(OH2) 17: External fault(EF) 18: 485 communication fault(CE) 19:Current detection fault(ItE)	/	¤
F0b.20	Previous 3 fault code	20:Motor antotune fault(tE) 21: EEPROM operation fault(EEP) 22: PID response offline fault(PIDE) 23: Reserved 24: Running time arrival(END) 25: Electrical overload(OL3)	/	¤

Code	Name	Setting Range	Default	Modify
F0b.21	Previous 4 fault code	26~31:Reserved 32: Grounding short circuit fault 1(SC) 33: Reserved 34: Speed deviation fault(dEu)	/	¤
F0b.22	Previous 5 fault code	35: Reserved 36:Underload fault(LL) 37: Hydraulic probe damage(tSF) 38: PV reverse connection fault(PVF) 39: PV overcurrent(PVOC) 40: PV overvoltage(PVOV) 41:PV undervoltage(PVLV) 42: Fault on communication with the boost module (E-422) 43: Bus overvoltage detected on the boost module (OV) Alarms: Weak light alarm (LS-A) Underload alarm (LL-A) Full water alarm (HF-A) Water-empty alarm (LE-A)	/	¤
F0b.23	Running frequency at present fault		/	¤
F0b.24	Ramp reference frequency at present fault		/	¤
F0b.25	Output voltage at the present fault		/	¤
F0b.26	Output current at present fault		/	¤
F0b.27	Bus voltage at present fault		/	¤
F0b.28	The max. temperature at present fault		/	¤
F0b.29	Input terminals state at present fault		/	¤
F0b.30	Output terminals state at present fault		/	¤
F0b.31	Running frequency at the last fault		/	¤
F0b.32	Ramp reference frequency at the last fault		/	¤
F0b.33	Output voltage at the last fault		/	¤
F0b.34	Output current at the last fault		/	¤
F0b.35	Bus voltage at the last fault		/	¤

Code	Name	Setting Range	Default	Modify
F0b.36	The max. temperature at the last fault		/	¤
F0b.37	Input terminals state at the last fault		/	¤
F0b.38	Output terminals state at the last fault		/	¤
F0b.39	Running frequency at the last but one fault		/	¤
F0b.40	Ramp reference frequency at the last but one fault		/	¤
F0b.41	Output voltage at the last but one fault		/	¤
F0b.42	Output current at the last but one fault		/	¤
F0b.43	Bus voltage at the last but one fault		/	¤
F0b.44	The max. temperature at the last but one fault		/	¤
F0b.45	Input terminals state at the last but one fault		/	¤
F0b.46	Output terminals state at the last but one fault		/	¤

5.11 F0C Group: Communication parameters

Code	Name	Setting Range	Default	Modify
F0C.00	Local address	1～247 0: broadcast address	1	◇
F0C.01	Baud rate selection	0: 1200BPS 1: 2400BPS 2: 4800BPS 3: 9600BPS 4: 19200BPS 5: 38400BPS 6: 57600BPS 7: 115200BPS	4	◇
F0C.02	Date bits checking set	0:No parity check（N，8，1）for RTU 1:Even parity check（E，8，1）for RTU 2:Odd parity check（O，8，1）for RTU 3:No parity check（N，8，2）for RTU 4:Even parity check（E，8，2）for RTU 5:Odd parity check（O，8，2）for RTU	1	◇
F0C.03	Communication on delay time	0～200mS	5	◇

Code	Name	Setting Range	Default	Modify
F0C.04	Communication on timeout delay	0.0（Disable），0.1～100.0S	0.0s	◇
F0C.05	Communication error action	0: Alarm and coast to stop 1: No alarm and continue to run 2: No alarm and stop(only Communication setup) 3: No alarm and stop	0	◇

5.12 F0d Group: Solar pump inverter function

Code	Name	Setting Range	Default	Modify
F0d.00	Solar pump inverter select	0: Invalid 1: Enable	1	◆
F0d.01	MPPT voltage select	0:MPPT voltage setting by keypad 1: Auto MPPT	1	◆
F0d.02	MPPT voltage setting by keypad	0.0~6553.5Vdc	250V(2S/2T) 450V(4T)	◇
F0d.03	PI control deviation	0.0~100.0%	0.0%	◇
F0d.04	Upper frequency output	F0d.05~100.0%	100.0%	◇
F0d.05	Lower frequency output	0.0%~F0d.04	20.0%	◇
F0d.06	KP1	0.00~100.00	5.00	◇
F0d.07	KI1	0.00~100.00	5.00	◇
F0d.08	KP2	0.00~100.00	35.00	◇
F0d.09	KI2	0.00~100.00	35.00	◇
F0d.10	PI Switch point	0.0~6553.5Vdc	20.0V	◆
F0d.11	Water level control	0: Digital input of the water-level control 1: AI1 2: AI2 3: AI3	0	◆
F0d.12	Full-water level threshold	0.0~100.0%	25.0%	◇
F0d.13	Empty-water level threshold	0.0~100.0%	75.0%	◇
F0d.14	Delay time for full-water	0~10000s	5s	◇

Code	Name	Setting Range	Default	Modify
F0d.15	Wake-up delay time in full water alarm	0~10000s	20s	◇
F0d.16	Delay time for empty-water	0~10000s	5s	◇
F0d.17	Wake-up delay time in empty-water alarm	0~10000s	20s	◇
F0d.18	Hydraulic probe damage	0.0~100.0%	0.0%	◇
F0d.23	Delay time of weak sunlight	0.0~3600.0s	100.0s	◇
F0d.24	Wake-up delay time in weak sunlight alarm	0.0~3600.0s	300.0s	◇
F0d.25	Initial reference voltage display	0.0~2000.0V	/	¤
F0d.26	MPPT Min.voltage	0.00~1.00 MPPT Min.voltage=PV open-circuit voltage*F0d.26	0.70	◇
F0d.27	MPPT Max.voltage	F0d.26~F0d.31	400V(2S/2T) 750V(4T)	◇
F0d.28	Adjustment of initial reference voltage	0.0~200.0V	5Vdc(2S/2T 10Vdc(4T)	◇
F0d.29	MPPT automatic adjust time	0.0~10.0s	1.0s	◇
F0d.30	MPPT automatic adjust range	5.0~100.0V	30.0V	◇
F0d.31	Max.voltage of MPPT	F0d.27~6553.5V	400V(2S/2T) 750V(4T)	◇
F0d.32	PV and mains power input select	0: Automatic switch 1: Mains input 2: PV input	2	◆
F0d.33	Switch voltage setting from PV to mains power	0.0V~F0d.34	140V(2S/2T) 250V(4T)	◇
F0d.34	Switch voltage setting from mains power to PV	F0d.33~750.0V	200V(2S/2T) 300V(4T)	◇
F0d.35	Rated water flow of pump	Unit: cubic meter/hour	0.0	◇
F0d.36	Rated lift head of pump	Unit: meter	0	◇
F0d.37	PV weak light voltage setting	0.0~750.0	140V(2S/2T) 250V(4T)	◇

Code	Name	Setting Range	Default	Modify
F0d.39	Inverter model series	0: Reserved 1: -2S 2: -2T 3: -4T	Depend on model	◆

5.13 F0U Group: Solar pump inverter state display

Code	Name	Setting Range	Default	Modify
F0U.00	Setting frequency	Display current set frequency of the inverter Range: 0.00Hz–F00.03	/	¤
F0U.01	Output frequency	Display current output frequency of the inverter Range: 0.00Hz–F00.03	/	¤
F0U.03	Output voltage	Display current output voltage of the inverter Range: 0–1200V	/	¤
F0U.04	Output current	Display current output current of the inverter Range: 0.0–3000.0A	/	¤
F0U.05	Motor speed	Display the rotation speed of the motor. Range: 0–65535RPM	/	¤
F0U.08	Motor power	Display current motor power Range: -300–300%	/	¤
F0U.11	DC bus voltage	Display current DC bus voltage of the inverter Range: 0.0–2000.0V	/	¤
F0U.26	Running time of this time	Display the inverter running time of this time Range: 0–65535min	/	¤
F0U.41	MPPT voltage	Display the setting MPPT voltage	/	¤
F0U.42	PV current input voltage	Display the actual input PV voltage	/	¤
F0U.43	MPPT Min.voltage	Display MPPT Min.voltage	/	¤
F0U.48	PV input power	Display the solar panel input power,Unit: kW	/	¤
F0U.49	PV input power last time	Display the solar panel input power last time,Unit:kW	/	¤
F0U.50	PV voltage last time	Display the solar panel input voltage last time,Unit:kW	/	¤

Code	Name	Setting Range	Default	Modify
F0U.51	Input power supply	LED Ones 0: PV power supply. 1: AC grid power supply	/	¤
F0U.52	Current water flow of pump	Cubic meter/hour	/	¤
F0U.53	Current lift head of pump	Unit: meter	/	¤
F0U.54	Total water flow at high	Cubic meter	/	¤
F0U.55	Total water flow at low	Cubic meter	/	¤
F0U.56	Reset total water flow	0:No action 1: Reset total water flow. F0U.54,F0U.55 will be reset to be 0	0	◆

Chapter 6 Function Parameters for PV inverter

6.1 F0d Group: Solar pump inverter function

Function Code	Name	Setting Range
F0d.00	Solar pump inverter select	0~1【1】

0: the function is invalid and the group of parameters cannot be used.

1: the function is enabled, and F0d parameters can be adjusted

Function Code	Name	Setting Range
F0d.01	MPPT voltage select	0~1【1】

0: means to apply voltage reference mode. The reference is a fixed value and given by F0d.02.

1: means to apply the reference voltage of Max. power tracking. The voltage is changing until the system is stable.

Note: If terminal 43 is valid, the function is invalid.

Function Code	Name	Setting Range
F0d.02	MPPT voltage setting by keypad	0.0~6553.5Vdc【250V】

If F0d.01 is 0, the reference voltage is given by F0d.02. (During test, reference voltage should be lower than PV input voltage; otherwise, the system will run at lower limit of frequency).

Function Code	Name	Setting Range
F0d.03	PI control deviation	0.0~100%【0.0%】

If the ratio percentage of real voltage to reference voltage, which is abs(bus voltage-reference voltage)*100.0%/ reference voltage, exceeds the deviation limit of F0d.03, PI adjustment is available; otherwise, there is no PI adjustment and the value is defaulted to be 0.0%.

abs: absolute value

Function Code	Name	Setting Range
F0d.04	Upper frequency output	F0d.05~100.0%【100%】

F0d.04 is used to limit the Max. value of target frequency, and 100.0% corresponds to F00.03.

After PI adjustment, the target frequency cannot exceed the upper limit.

Function Code	Name	Setting Range
F0d.05	Lower frequency output	0.0%~F0d.04【20%】

F0d.05 is used to limit the Min. value of target frequency, and 100.0% corresponds to F00.03.

After PI adjustment, the target frequency cannot be less than the lower limit.

Function Code	Name	Setting Range
F0d.06	KP1	0.00~100.00【5.00】

Proportion coefficient 1 of the target frequency.

The bigger the value is, the stronger thE effect and faster the adjustment is.

Function Code	Name	Setting Range
F0d.07	KI1	0.00~100.00【5.00】

Integral coefficient 1 of the target frequency

The bigger the value is, the stronger the effect and faster the adjustment is.

Function Code	Name	Setting Range
F0d.08	KP2	0.00~100.00【35.00】

Proportion coefficient 2 of the target frequency.

The bigger the value is, the stronger thE effect and faster the adjustment is.

Function Code	Name	Setting Range
F0d.09	KI2	0.00~100.00【35.00】

Integral coefficient 2 of the target frequency

The bigger the value is, the stronger the effect and faster the adjustment is.

Function Code	Name	Setting Range
F0d.10	PI Switch point	0.0~6553.5Vdc【20.0V】

If the absolute value of bus voltage minus the reference value is bigger than F0d.10, it will switch to F0d.08 and F0d.09; otherwise it is F0d.06 and F0d.07.

Function Code	Name	Setting Range
F0d.11	Water level control	0~3【1】

If the function code is 0, the water-level signal is controlled by the digital input.

See 43 and 44 functions of X terminals in group F05 for detailed information.

If the full-water signal is valid, the system will report the alarm (A-tF) and sleep after the time of F0d.14.

During the alarm, the full-water signal is invalid and the system will clear the alarm,after the time of F0d.15,inverter will start to run again.

If the empty-water signal is valid, the system will report the alarm (A-tL) and sleep after the time of F0d.16.

During the alarm, the empty -water signal is invalid and the system will clear the alarm,after the time of F0d.17,inverter will start to run again.

If the function code is 1~3, it is the reference of water-level control analog signal.

Function Code	Name	Setting Range
F0d.12	Full-water level threshold	0.0~100.0%【25.0%】

This code is valid when F0d.11 water level control is based on analog input.

If the detected water level control analog signal is less than the water level threshold F0d.12 and keeps in the state after the delay time F0d.14, the system reports A-tF and sleeps.If the delay time is not reached, the signal is bigger than the water level threshold, the time will be cleared automatically. When the measured water level control analog signal is less than the water level threshold, the delay time will be counted again.

During the full-water alarm, if the detected water level signal is higher than the threshold of F0d.12 and the delay counts, the alarm is cleared after the time set by F0d.15 is reached in this continuous state continues. During the non-continuous application, the delay timing will clear automatically.

Function Code	Name	Setting Range
F0d.13	Full-water level threshold	0.0~100.0%【75.0%】

This code is valid when F0d.11 water level control is based on analog input.

If the detected water level control analog signal is greater than the water level threshold F0d.13 and keeps in the state after the delay time F0d.16, the system reports A- tL and sleeps. If the delay time is not reached (that means non-continuous), the delay time is automatically cleared. When the detected water level control analog signal is less than the water level threshold, the delay counts.

During the empty-water alarm, if the detected water level control analog signal is less than the water level threshold F0d.13 and delay counts, the empty-water alarm is cleared after the delay time set by F0d.17 in this continous state. In the non-continuous state, the delay time is automatically cleared.

Function Code	Name	Setting Range
F0d.14	Delay time for full-water	0~10000s【5s】

Time setting of full water delay (This function code is still valid when the digital indicates the full-water signal.)

Function Code	Name	Setting Range
F0d.15	Wake-up delay time in full water alarm	0~10000s【20s】

Time setting of wake-up delay in full-water state (This function code is still valid when the digital indicates the full-water signal.)

Function Code	Name	Setting Range
F0d.16	Delay time for empty-water	0~10000s【5s】

Time setting of empty-water delay (This function code is still valid when the digital indicates the empty-water signal.)

Function Code	Name	Setting Range
F0d.17	Wake-up delay time in empty-water alarm	0~10000s【20s】

Time setting of wake-up delay in empty-water state (This function code is still valid when the digital indicates the empty-water signal.)

Function Code	Name	Setting Range
F0d.18	Hydraulic probe damage	0.0~100.0%【0.0%】

0.0%: Invalid.

If it is not 0.0%, when the signal is longer than F0d.18, it will report tSF fault directly and stop.

Function Code	Name	Setting Range
F0d.23	Delay time of weak sunlight	0.0~3600.0s【100.0s】

Delay time of weak light

If the output frequency is less than or equal to the lower limit of PI output frequency and the state lasts for the set value, it will report A-LS and sleep. If the state is not continuous, the delay counting will be cleared automatically.

Note: If the bus voltage is lower than the undervoltage point or the PV voltage is lower than 70V, it will report the weak light alarm without any delay time.

If F0d.32=0, the system will switch to the mains input when the light is weak.

Function Code	Name	Setting Range
F0d.24	Wake-up delay time in weak sunlight alarm	0.0~3600.0s【300.0s】

Delay time of wake-up at weak light

If the weak light alarm is reported, after the delay time of wake-up, the alarm will be cleared and it will run again.

When F0d.32=0, if the PV voltage ishigher than F0d.34, after the delay time,it will switch to PV input mode.

Function Code	Name	Setting Range
F0d.25	Initial reference voltage display	0.0~2000.0V【0】

Function Code	Name	Setting Range
F0d.26	MPPT Min.voltage	0.00~1.00【0.7】

This function code is used to set the minimum voltage reference during maximum power tracking. Min. voltage reference during max. power tracking = solar panel open-circuit voltage * F0d.26. solar panel open-circuit voltage = F0d.25+ F0d.28

Track the maximum power in the range of Min. voltage reference~F0d.27.F0d.27 must be greater than Min. voltage reference. The less the difference, the faster the tracking is. The maximum voltage needs to be in the range. F0d.26 and F0d.27 can be adjusted according to site operation.

Function Code	Name	Setting Range
F0d.27	MPPT Max.voltage	F0d.26~F0d.3【400V】

Valid in MPPT Max. tracking voltage, the tracked max. voltage.The default value depends on model.

Model	Max voltage reference	Max Vmppt
-2S	400	400
-2T	400	400
-4T	750	750

F0d.28	Adjustment of initial reference voltage	0.0~200.0V【5V】

MPPT begins to change from the reference voltage.

Initial reference voltage =PV voltage-F0d.28

F0d.29	MPPT automatic adjust time	0.0~10.0s【1.0s】

When F0d.29 is set to 0.0, the automatic adjustment is invalid.

If it is not 0.0, the upper and lower limits of Vmppt will be adjusted automatically at the inveral set by F0d.29. The medium value is the current PV voltage and the limit is F0d.30: Maximum/Minimum reference voltage=Current PV voltge±F0d.30 and it will update to F0d.26 and F0d.27 at the same time.

F0d.30	MPPT automatic adjust range	5.0~100.0V【30.0V】

Adjustment of the upper and lower limits

F0d.31	Max.voltage of MPPT	F0d.27~6553.5V【400.0V】

The upper limit cannot exceed the F0d.28 when Vmppt is the maximum value.During the maximum power tracking, the upper limit of the solar panel reference voltage will not exceed the value set by F0d.31. The factory value depends on the model. Default, 4T:750V,2S and 2T:400V.

F0d.32	PV and mains power input select	0~2【2】

0: Automatic shift

1: Mains input

2: PV input

If the value is 0, the system will switch between PV input and mains input according to the detected PV voltage and threshold;

If the value is 1, the system will force to switch to mains input;

If the value is 2, the system will force to switch to PV input.

Note: When the terminal input 42 is valid, the function code will be invalid.

F0d.33	Switch voltage setting from PV to mains power	0.0V~F0d.34【70.0V】

If PV voltage is lower than the threshold or the light is weak, it switch to mains input through the relay output.

If the value is 0, it is invalid.

For inverters without the boost module, the switching point voltage is determined by the external voltage detection circuit. 2S/ST:140V, 4T:250V

For inverters with the boost module, the switching point voltage is 70V.

F0d.34	Switch voltage setting from mains power to PV	F0d.33~400.0V【100.0V】

If PV voltage is greater than the threshold, it can switch to PV input through the relay output after the time set by F0d.24. To prevent frequent switching, this threshold must be greater than F0d.33.

If the value is 0.0, it is invalid.

The default value depends on model.

F0d.35	Rated water flow of pump	【0.0】

Pump rated water flow is Q_N when the pump runs at the rated pump frequency and rated lift..

Unit: m³/hour.

F0d.36	Rated lift head of pump	【0.0】

Pump rated lift head is H_N when the pump runs at the rated frequency and rated current.

Unit: meter

F0d.37	PV weak light voltage setting	0.0-400.0V【70.0V】

When the PV voltage is less than the preset voltage, the system reports the PV undervoltage (UV) fault.

The default value depends on the model:

Models	PV UV point
-2S	140V
-2T	140V
-4T	250V
Any model with the boost module	70V

F0d.39	Inverter model series	1~3【Depend on model】

This function code is to display the model type

1: -2S 220V; single-phase input; three-phase output

2: -2T 220V; three-phase input; three-phase output

3: -4T 380V; three-phase input; three-phase output

Chapter 7 Fault checking and Solution

7.1 Fault alarm and countermeasures

There are 35 warning messages and protection functions. Once the fault occurs, the inverter fault relay contacts action. Before seeking service, the user can perform self-check according to the tips in this section to analyze the cause of the fault and find a solution. If you can't solve it yourself, please seek service, contact the dealer of your purchased inverter or contact us directly.

If the C500 inverter is powered up and running, if an abnormality occurs, the fault code will be displayed on the inverter display panel. At this time, the inverter has effectively protected this fault, and the output stops outputting. The current fault information indicated by the display panel is represented by a display code consisting of 2~5 letters and numbers.

In the event of a fault, the keypad of the inverter displays the fault function code, the fault code and its representative contents and corrective actions are as follows:

Fault code	Fault type	Possible Cause	Solution
0	No fault		
Out1	IGBT Phase-U fault	1. Acc/Dec time is too short. 2. IGBT module fault. 3. Fault caused by interference. 4. Grounding is not properly.	1. Increase Acc/Dec time. 2. Ask for support. 3. Inspect external equipment and eliminate interference.
Out 2	IGBT Phase-V fault		
Out 3	IGBT Phase-W fault		
OC1	Over-current when acceleration	1.Acc time is too Short. 2.Motor parameters are not accurate. 3.The voltage of the grid is too low. 4.The power of the inverter is too low. 5. V/F curve is not suitable.	1.Prolong Acc time. 2.The motor parameters self-adjustin g 3.Check input power. 4.Select inverter with right capacity. 5.Reset V/F curve or torque boost value.
OC2	Over-current when deceleration	1.Dec time is too Short. 2.Load potential energy or inertia is too large. 3.The power of the inverter is too low.	1.Prolong Dec time. 2.Connect external braking resistance or braking unit. 3.Select inverter with right capacity.
OC3	Over-current when constant speed running	1.The load transients or is abnormal. 2.The voltage of the grid is too low.	1. Check load’s changing and eliminate it. 2.Check input power. 3.Select inverter with right capacity

Fault code	Fault type	Possible Cause	Solution
		3.The power of the inverter is too low.	
OU1	Over-voltage when acceleration	1. Input voltage is too high. 2. While power is off, restart motor which is running .	1.Check input power. 2.Avoid restart-up after stopping.
OU2	Over-voltage when deceleration	1 .Dec time is too short. 2.The inertia of the load is big. 3.The input voltage is abnormal.	1.Increase the Dec time. 2.Increase the energy-consuming components. 3. Check the input power.
OU3	Over-voltage when speed constant running	1 .The input voltage changes abnormally. 2. The inertia of the load is big.	1 .Install the input reactor. 2.Add proper energy-consuming components.
UU	DC bus Under-voltage	1.The voltage of the grid is low. 2.Momentary interruption.	1.Check input power. 2.RESET operation.
OL1	Motor overload	1 .The voltage of the power supply is too low. 2. The motor setting rated current is incorrect. 3. The motor stall or load transients is too strong. 4.The power of the motor is too big.	1 .Check the power grid voltage. 2. Reset the rated current of the motor. 3. Check the load and adjust the torque lift. 4. Select a proper motor.
OL2	Inverter overload	1 .The acceleration is too fast. 2. Restart the rotating motor. 3. The voltage of the power supply is too low. 4. The load is too heavy.	1.Increase the ACC time 2. Avoid restarting after stopping. 3. Check the power of the supply line. 4. Select an inverter with bigger power.
SPI	Input phase loss	Phase loss or fluctuation of input R, S and T	1.Check input power 2.Check input wiring.
SPO	Output phase loss	1.U, V and W phase loss output. 2. Three phase of the load are serious asymmetrical.	1 .Check output distribution. 2. Check the motor and cable.
OH1	Rectify overheat	1.Sudden over current of the inverter. 2.There is direct or indirect short circuit between output 3 phase.	1 .Refer to the over current solution. 2. Rewiring. 3. Dredge the wind channel or change the fan. 4. Reduce the ambient temperature.
OH2	IGBT overheat		

Fault code	Fault type	Possible Cause	Solution
		3.Air duct jam or fan damage. 4.Ambient temperature is too high. 5.The wiring of the control panel or plug-ins are loose. 6.The auxiliary power supply is damage and the drive voltage is undervoltage. 7.The rectifier module is broken. 8.The control panel is abnormal.	5. Check and reconnect. 6. Ask for service.
EF	External fault	Xn External fault input terminal take action.	Inspect external equipment.
CE	Communication fault	1.Improper baud rate setting. 2.Communication fault. 3.Communication is interrupted for Long time.	1. Set proper baud rate. 2. Ask for service. 3.Check the communication connection distribution.
ItE	Current detection fault	1. Wires or connectors of control board are loose. 2. Auxiliary power is damaged. 3.Hall sensor is damaged. 3. Amplifying circuit is abnormal.	1.Check the wiring.
tE	Motor autotuning fault	1 .The motor capacity does not comply with the inverter capacity. 2.The rated parameter of the motor does not be set correctly. 3. There is a big difference between autotune.parameter and the standard parameter 4. Autotune overtime.	1.Change the inverter model. 2.Set the rating parameters according to the name plate of the motor. 3.Do not connect motor to the load and identify again. 4.Check the motor wiring and set the parameters.
EEP	EEPROM fault	1 .Error of controlling the write and read of the parameters 2. Damage to EEPROM.	1.Press STOP/RESET to reset. 2.Ask for service.

Fault code	Fault type	Possible Cause	Solution
PIDE	PID feedback fault	1.PID feedback offline. 2. PID feedback source disappear disappear.	1.Check the PID feedback signal wires. 2.Check PID feedback source.
bCE	Braking unit ault	1.Braking circuit fault or damage to the braking pipes. 2.The external braking resistor is a little low.	1.Check the braking unit and change new braking pipes. 2.Increase braking resistence.
END	Time reach of factory setting	Trial time arrival	Using parameter initialization functio n to remove record information.
OL3	Electronic thermal overload	1.The temperature sensor wiring is loose 2.The motor temperature is too high.	1.Check the temperature sensor wiring and troubleshooting. 2.Reduce carrier frequency or other cooling measures to cooling the m otor.
PCE	Keyboard connect fault	Keyboard wire fault.	Replace keyboard wire.
UPE	Parameters upload error	1.The keyboard and control panel cable is too long，the parameter is disturbed while transmission 2.In the download process , keyboard save data does not match the data with inverter.	1.Shorten the keyboard and control panel wire to reduce EMI. 2. Before the download process , make sure whether the keyboard sa ved data are matching with inverter.
DNE	Parameters download error		
SC	Short circuit	1. Acc time is too short. 2.IGBT module is damaged. 3.Electromagnetic disturb. 4.Output line is short circuit to the earth. 5.Short circuit between inverter and output side.	1.Prolong Acc time properly. 2.Check periphery equipment and restart after fault eliminating. 3.Ask for service.
LCE	Current limiting fault	1.The motor stall or load transients is too strong. 2.The power of the inverter is too low.	1.Reduce the load,Check the motor and mechanical conditions. 2.Select an inverter with bigger power.
GF	Phase short circuit	Short circuit between motor lines	Check motor line insulation
ECE	Encoder failure	1. Unconnected encoder	1. Check the encoder wiring

Fault code	Fault type	Possible Cause	Solution
		2. Encoder failure	2. Seek technical support from manufacturers
tSF	Hydraulic probe damage	Hydraulic probe damage	Change the damaged hydraulic probe.
PVF	PV reverse connection fault	Incorrect PV wiring	Change the wiring direction of the positive and negative terminals and connect the cables again.
PVOC	PV overcurrent	1. The acceleration or deceleration is too fast. 2. The inverter power is too low. 3. The load transients or is abnormal. 4. The grounding is short circuited.	1. Increase the ACC or DCC time. 2. Select the inverter with a larger power. 3. Check if the load is short circuited (the grounding short circuited or the wire short circuited) or the rotation is not smooth.
PVOV	PV overvoltage	1. The solar panel input voltage is too high. 2. Model -4 is set as another model.	1. Reduce the number of solar panels that are wired in series. 2. Check and reset the model.
PVLV	PV undervoltage	1. The power of the solar panel series is too low or it is cloudy and rainy weather. 2. The motor start-up current is too high.	1. Increase the number of solar panels or perform the test in the normal sun light. 2. Change the motor.
485E	Fault on communication with boost module 485	Improper contact with the communication cables	Check the four communication cables of 485 and ensure that they are connected properly.
OV	Bus overvoltage detected at the boost module side	The sun light changes suddenly.	Adjust the boost PI parameters. Enlarge the values of F0d.47 and F0d.48
LS-A	Weak light alarm	The sun light is weak or the solar panel configuration is insufficient.	The equipment automatically runs when the light becomes strong. Check whether the solar panel configuration is proper
LL-A	Underload alarm	The tank is empty.	Check the tank.
HF-A	Full-water alarm	The tank is full.	If the user has set the full-water alarm function, the equipment automatically

Fault code	Fault type	Possible Cause	Solution
			stops when the full-water alarm time reaches the specified time. In this situation,the user does not need to perform any operation.Otherwise, check whether terminals are wired incorrectly.
LE-A	Empty-water alarm	The deep well water is empty.	If the user has set the empty-water alarm function, the equipment automatically stops when the empty-water alarm time reaches the specified time.In this situation, the user does not need to perform any operation. Otherwise, check whether terminals are wired incorrectly.

Chapter 8 Peripheral Equipment

8.1 AC reactor

AC reactor can improve power factor and suppress high-order harmonic from the power side. In the following cases, AC input reactor must be used:

The power supply capacity to the Inverter capacity is more than 10:1. Then tsilicon load is connected to the same power or power factor compensation device with switching control.

Three-phase power supply voltage unbalance degree is big（≥3%）。

Table 9-1 Specifications of the commonly used AC reactor

Voltage(V)	Power(kW)	Current(A)	Inductance (mH)	Voltage(V)	Power(kW)	Current(A)	Inductance (mH)
220	0.4	2.4	4.6	380	0.75	2.5	7.6
	0.75	4.5	2.4		1.5	4	4.8
	1.5	7	1.6		2.2	6	3.2
	2.2	11	1.0		4	9	2.0
	4	18	0.6		5.5	13	1.5
	5.5	22	0.5		7.5	17	1.2
	7.5	30	0.4		11	25	0.8
	11	42	0.27		15	32	0.6
	15	55	0.2		18.5	38	0.5
	18.5	70	0.16		22	45	0.42
	22	80	0.14		30	60	0.32
	30	110	0.1		37	75	0.26
	37	145	0.08		45	90	0.21
					55	110	0.18
					75	150	0.13
					93	170	0.11
					110	210	0.09
					132	250	0.08
					200	380	0.05
					250	480	0.04

8.2 DC reactor

While the power grid capacity is much bigger than the inverter, or the power supply capacity is more than 1000KVA, or the demand for mproving the power supply power factor is very high,DC reactor must be used.DC reactor can be used in conjunction with AC reactor, it is helpful to reduce input high-order harmonic.

Table 9-2 Specifications of the commonly used DC reactor

Voltage(V)	Power(kW)	Current(A)	Inductance (μH)	Voltage(V)	Power(kW)	Current(A)	Inductance (μH)
220	11~15	75	450	380	11~15	40	1500
	18.5~30	150	200		18.5~30	75	600
	37~55	300	100		37~55	150	300
					75~90	220	200
					110~132	280	140
					160~200	370	110
					220	560	70

8.3 Remote operation keyboard

This series of inverter is with exquisite design and easy to use keyboard. User wants to keyboard panel to extend to other place, you can buy extension line, simply put forward with orders. The user can remove the panel to place within 10 m away from the host.

8.4 Braking unit and braking resistance

Braking resistance value and power in the chart are decided according to common inertia load and intermittent braking mode. While used in large inertia occasion or long time frequent brake occasion, please adjust resistance value and power according to the inverter specification and the rated parameter of braking unit.

Under the situation of braking torque is 100% and the brake unit utilization rate is 10%, recommend brake resistance as following table.

Table 9-3 Suggested braking resistance specification parameters

Voltage (V)	Motor power(KW)	Resistance value(Ω)	Resistance power(KW)	Voltage (V)	Motor power(KW)	Resistance value(Ω)	Resistance power(KW)
220	0.75	200	0.1	380			
	1.5	100	0.25		1.5	400	0.25
	2.2	75	0.25		2.2	250	0.25
	4	40	0.4		4	150	0.4
	5.5	30	0.5		5.5	100	0.5
	7.5	20	0.8		7.5	75	0.8
	11	13.6	2.25		11	50	1
	15	10	3		15	40	1.5
	18.5	8	4		18.5	30	4
	22	6.8	4.5		22	30	4
	30	5	6		30	20	6
	37	5	6		37	16	9

SINCR **Shenzhen SINCREA Electrical Technology Co.,Ltd**

Warranty Card

User	Name:	
	Address:	
	Post Code:	
	Contact:	Tel:
Product	Model:	
	Date of phurchase:	S/N No.:
	Use for machine:	Motor power:
	Distributor agent name:	
Fault	（Repair time and content）:	
Comment	Thank you for your evaluation of the quality of our services: ☐ Very good ☐ Good ☐ Normally ☐ Bad User signature date: Y M D	
Repair person/Tel:		Repair date:

Shenzhen SINCREA Electrical Technology Co.,Ltd

Certificate of Quality

Inspector: _____

TThis product has been inspected by our quality control and quality assurance department. Its performance parameters are in compliance with the standard “Product Manual” and are allowed to leave the factory.

Warranty Agreement

1.The warranty period of the product is 24 months （refer to the barcode on the equipment body）.During the warranty period, if the product fails or is damaged under the condition of normal use by following the instruction.Our company will be responsible for free maintenance.
2.Within the warranty period, maintenance will be charged for the following reasons:
A.The damage caused by improper use or repair/modification without prior permission.
B.The damage caused by fire, flood, abnormal voltage, other disasters and second disaster;
C.The hardware damage caused by dropping or transportation upon the procurement.
D.The damage caused by the improper operation;
E.The damage or fault caused by the trouble our of the equipment (e.g.external device).
3.If there is any fault or damage to the product, please correctly fill out the Product Warranty Card in detail.
4.The maintenance fee is charged according to the newly adjusted Maintenance Price List by our company.
5.In general, the warranty card will not be re-issued.Please keep the card and present it to the maintenance personnel when asking for maintenance.
6.If there is any problem during the service, please contact the agent of our company or our company directly.
7.This agreement shall be interpreted by Shenzhen Sincrea Electrical Technology Co., Ltd.

Shenzhen Sincrea Electrical Technology Co., Ltd.
Service Center
Address: 13th Floor, Building A, Qiaode Technical Park, High-tech Park West, Guangming New District, Shenzhen
Tel:+86 755 29420485 P.C.: 518107
Website: http: //www.sincrea.com

Warranty Agreement

1.The warranty period of the product is 24 months （refer to the barcode on the equipment body）.During the warranty period, if the product fails or is damaged under the condition of normal use by following the instruction.Our company will be responsible for free maintenance.
2.Within the warranty period, maintenance will be charged for the following reasons:
A.The damage caused by improper use or repair/modification without prior permission.
B.The damage caused by fire, flood, abnormal voltage, other disasters and second disaster;
C.The hardware damage caused by dropping or transportation upon the procurement.
D.The damage caused by the improper operation;
E.The damage or fault caused by the trouble our of the equipment (e.g.external device).
3If there is any fault or damage to the product, please correctly fill out the Product Warranty Card in detail.
4.The maintenance fee is charged according to the newly adjusted Maintenance Price List by our company.
5.In general, the warranty card will not be re-issued.Please keep the card and present it to the maintenance personnel when asking for maintenance.
6.If there is any problem during the service, please contact the agent of our company or our company directly.
7.This agreement shall be interpreted by Shenzhen Sincrea Electrical Technology Co., Ltd.

Shenzhen Sincrea Electrical Technology Co., Ltd.
Service Center
Address: 13th Floor, Building A, Qiaode Technical Park, High-tech Park West, Guangming New District, Shenzhen
Tel:+86 755 29420485 P.C.: 518107
Website: http: //www.sincrea.com